XORBARS
Unleash your pulling power

Parallel Bars

*Post thickness & style vary depending on requirements
**Do not scale from this drawing
*** Drawings use 125mm x 125mm (5x5 Inch) Posts

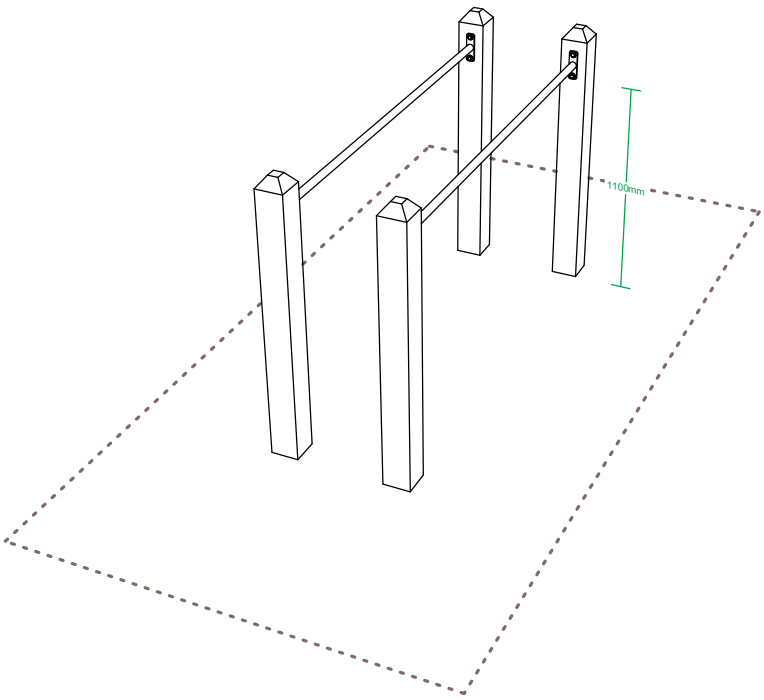

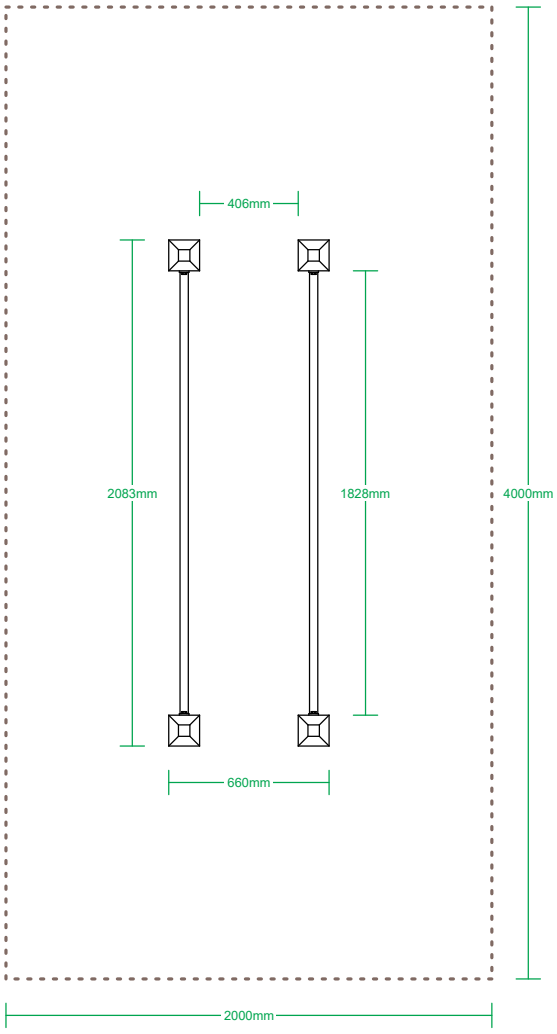

Specifications

Age range:	13 Years - Adult
Under 13:	With supervision
Max number of users:	1 per bar / station.
Safety surface required:	Yes (Minimum = Grass)
Standard compliance:	EN 16630
Requires supervision:	Yes
Foundation depth	700 - 900mm

All dimensions are in metric.
Bar type: Powder coated or Stainless Steel

Footings

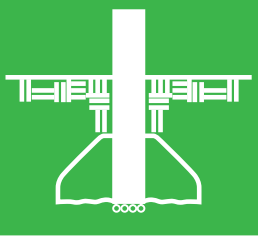

Minimum= 500mm
Maximum = 700mm

Border shows general floor space required. This can be reduced for residential requirements.

Safety & Maintenance

Please see safety and maintenance for all our outdoor fitness equipment. Xorbars Ltd is not responsible for DIY installed products. Instructions are as a guide only. Equipment should be checked on a regular basis and maintained accordingly. Installation instructions are available to download from www.xorbars.co.uk